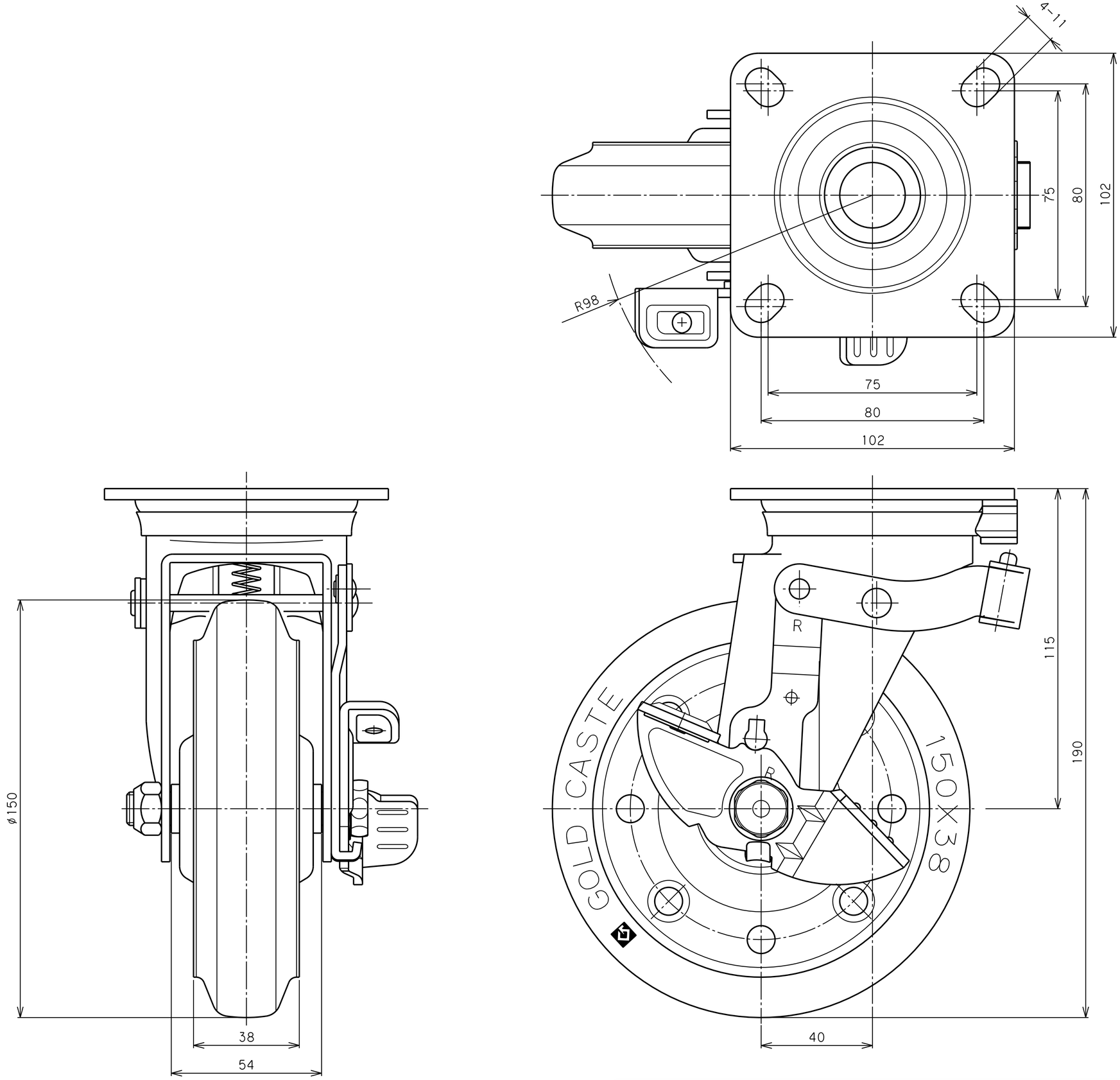

品名	SMJ-150RB-KSR	図番	S40NE0ABA-C01	GOLD CASTER