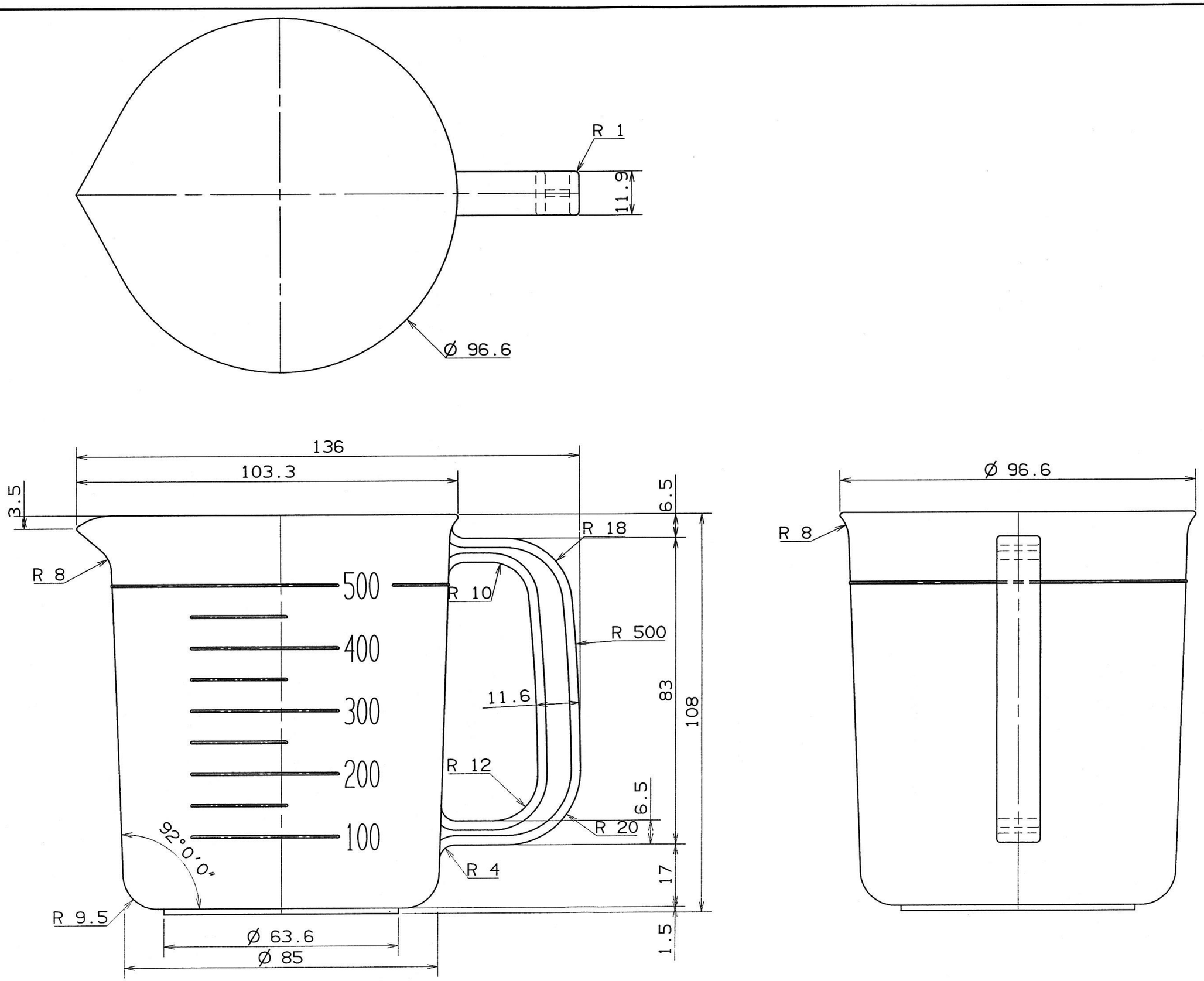
R 1
11.5
Ø 96.6
136
103.3
3.5
6.5
R 18
R 8
500
R 10
400
R 500
300
11.6
83
108
200
R 12
6.5
100
R 20
92°0'0"
R 4
17
R 9.5
1.5
Ø 63.6
Ø 85
Ø 96.6
R 8